ANC - Series Temperature Controllers

ORDERING INFORMATION 訂貨規格

ANC– [ ][ ][ ] – [ ] [ ] – [ ] [ ] [ ]

型號 Model No. | 輸入 Input | 溫度範圍 Temp. Range | 輸出 Output | 控制 Control | 警報 Alarm

型號 Model No.
Please refer to picture of temperature controller

Temperature Range
Please refer to the specifications

Alarm	Code
None	-
High/Low Alarm	1

Input	Code
J(IC)	J
K(CA)	K
P100 Ω	P
PR13%A	R

輸出 Output	Code
None	-
Relay	R
DC 1-5V	V
DC 4-20mA	A
DC 24V to drive SSR	S

Control	Code
None	-
On-Off	ON
P	-P
PD	PD

DIMENSIONS: (Unit: mm) 尺寸圖:

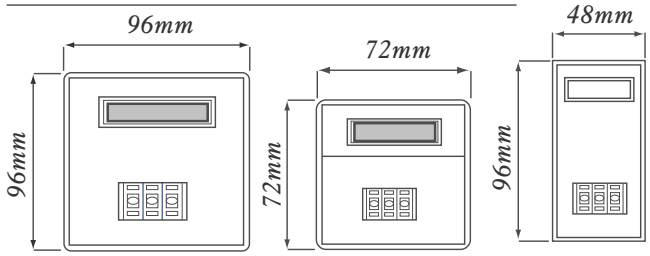

PANEL CUTOUT 開孔尺寸圖:

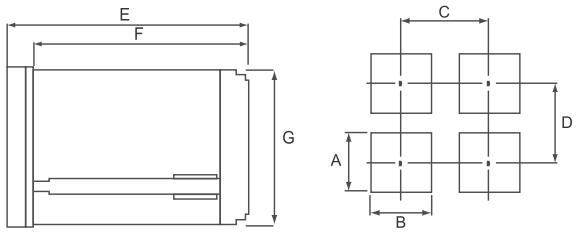

SIZE 尺寸	A	B	C	D	E	F	G
96mm x 96mm	90 +1 -0	90 +1 -0	110 Or More	110 Or More	120	105	89
72mm x 72mm	68 +1 -0	68 +1 -0	82 Or More	82 Or More	110	100	68
48mm x 96mm	90 +1 -0	43 +1 -0	60 Or More	110 Or More	132	117	90

TERMINAL CONNECTIONS 接線說明:

(For Size: 96x96mm/48x96mm)

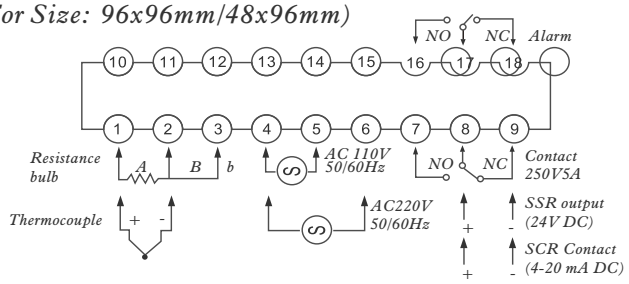
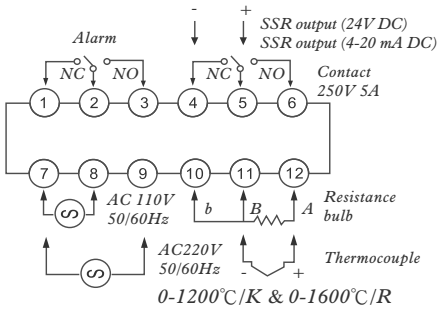
(For Size: 72x72mm)